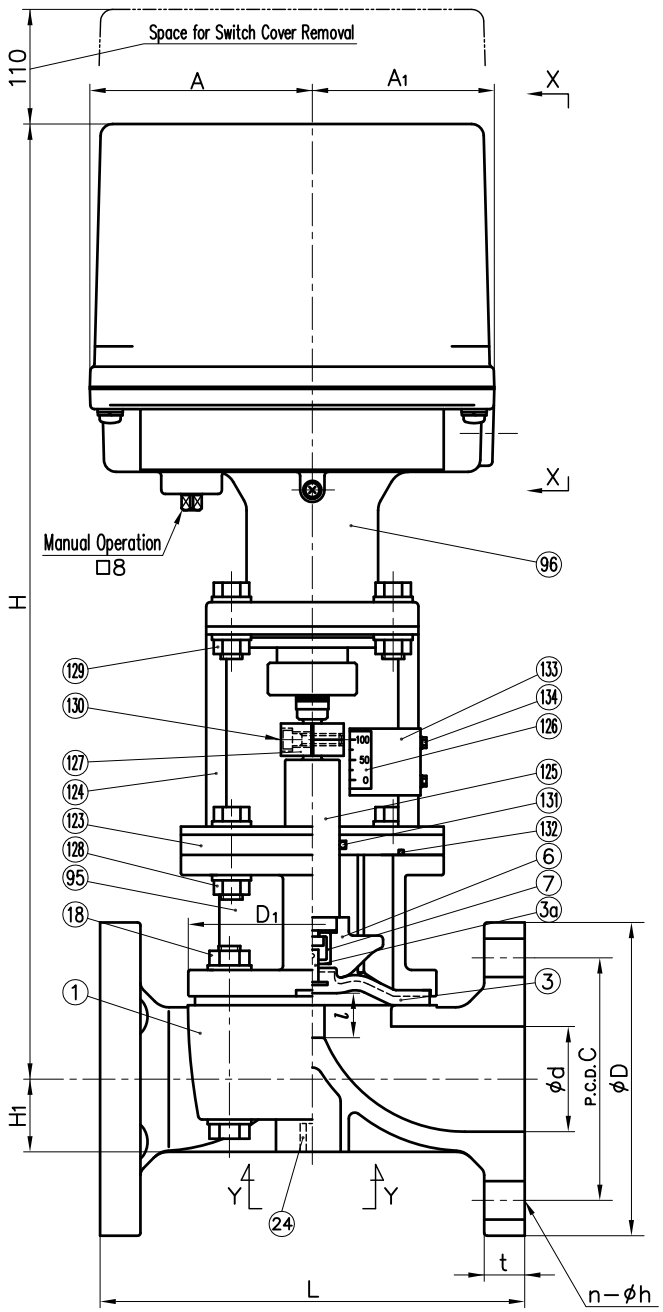

DIMENSIONS TABLE

UNIT : mm

NOMINAL SIZE		d	DIN PN10 D	C	n	h	D_1	L	t	l (LIFT)	H	H_1	A	A_1	A_2	S	S_1	S_2	ACTUATOR MODEL
15mm	½"	16	95	65	4	14	54×66	130	12	10	406	19.5	101	81	140	25	M5	10	PSN−1
20	¾	20	105	75	4	14	54×66	150	13	10	408	17.5	101	81	140	25	M5	10	PSN−1
25	1	25	115	85	4	14	67×80	160	13	12	413	18.5	101	81	140	25	M5	10	PSN−1
32	1¼	32	140	100	4	18	67×80	180	16	12	416	22.5	101	81	140	25	M5	10	PSN−1
40	1½	40	150	110	4	18	110×110	200	20	21	464	27.5	110	90	150	45	M6	14	PSN−3
50	2	52	165	125	4	18	123×123	230	22	25	473	36	110	90	150	45	M6	14	PSN−3

NOTE.
1. Diaphragms except EPDM and PTFE are available in FKM,VIFLON−C (FKM−C) ,VIFLON−F (FKM−F) ,CSM and NBR when required.
2. The shape and appearance of assembly differ a little with nominal size compared to this drawing.

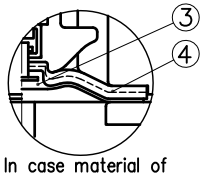

In case material of diaphragm is PTFE

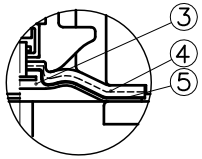

In case material of diaphragm is PTFE with cushion cover

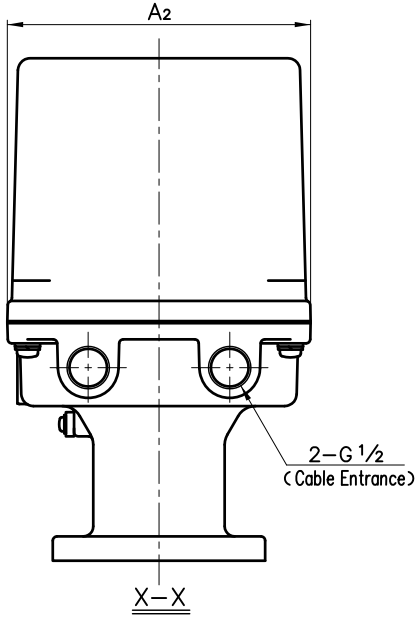

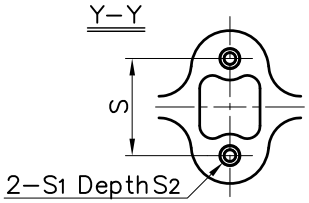

No.	DESCRIPTION	QTY.	MATERIAL	REMARKS
134	SCREW (F)	2	STAINLESS STEEL (SUS304)	
133	INDICATOR PLATE	1	STAINLESS STEEL (SUS304)	
132	O−RING (K)	1	NBR	
131	O−RING (J)	1	NBR	
130	BOLT (F)	2	STAINLESS STEEL (SUS304)	
129	BOLTO・NUT (F)	4 Sets	STAINLESS STEEL (SUS304)	
128	BOLTO・NUT (E)	4 Sets	STAINLESS STEEL (SUS304)	
127	JOINT	1	COPPER ALLOY (C3604)	
126	INDICATOR SEAL	1	ACRYL	
125	STEM (D)	1	COPPER ALLOY (C3604)	
124	STAND (A)	1	STAINLESS STEEL (SUS304)	
123	SPACER (A)	1	PVC	
96	ACTUATOR	1	ALUMINIUM etc.	Acryl Coat
95	BONNET	1	CAST ALUMINIUM ALLOY (AC4A)	Epoxy Coat
24	ENSAT FOR BODY	2	STAINLESS STEEL (SUS303)	
18	BOLT・NUT (A)	4 Sets	STAINLESS STEEL (SUS304)	
7	JOINT	1	STAINLESS STEEL (SUS304)	
6	COMPRESSOR	1	PVDF	
5	CUSHION COVER	1	□Noting □PVDF	Used for PTFE Diaphragm
4	CUSHION	1	EPDM	
3a	INSERTED METAL OF DIAPHRAGM	1	STAINLESS STEEL (SUS304)	
3	DIAPHRAGM	1	□EPDM □PTFE □Others ( )	
1	BODY	1	□PVC □C−PVC □PP □PVDF	

ITEM	DIAPHRAGM VALVE (TYPE14) ELECTRIC MODEL TYPE M ASS'Y DIN PN10 : FLANGED END 15mm (½") ~50mm (2") with E−P POSITIONER		
DRAWN	E.Emmei	DATE	SCALE
CHECKED	H.Kawano	MAY.1.2023	~
APPROVED	K.Koushou	DRAWING No. D1−AE007DE	△
SPECIAL ORDER No.		ASAHI YUKIZAI CORPORATION	