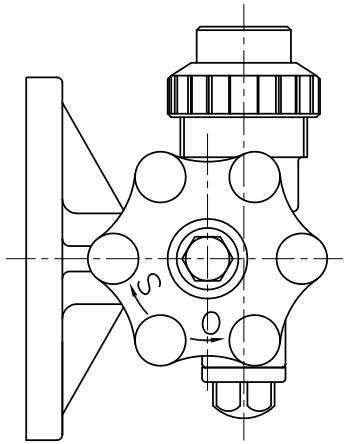

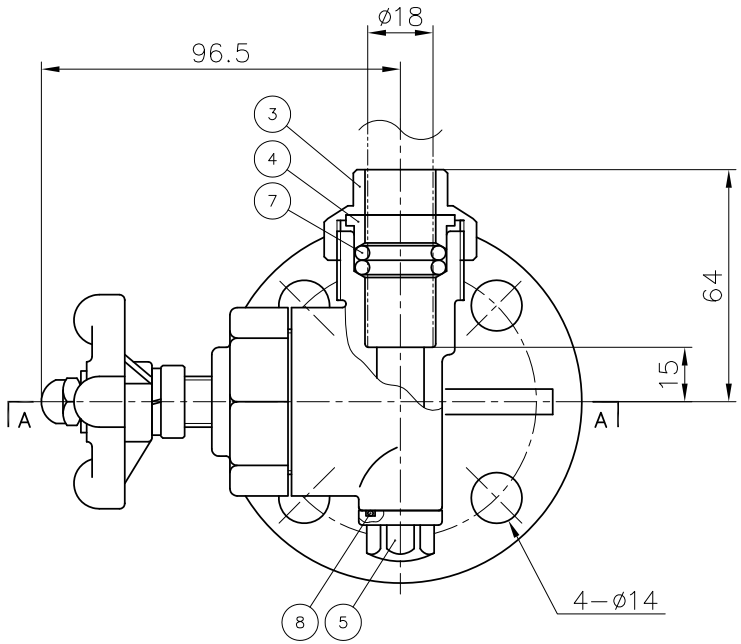

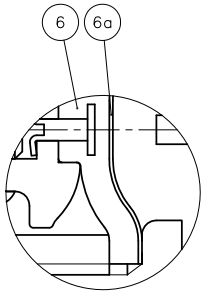

In case of
used for PTFE DIAPHRAGM

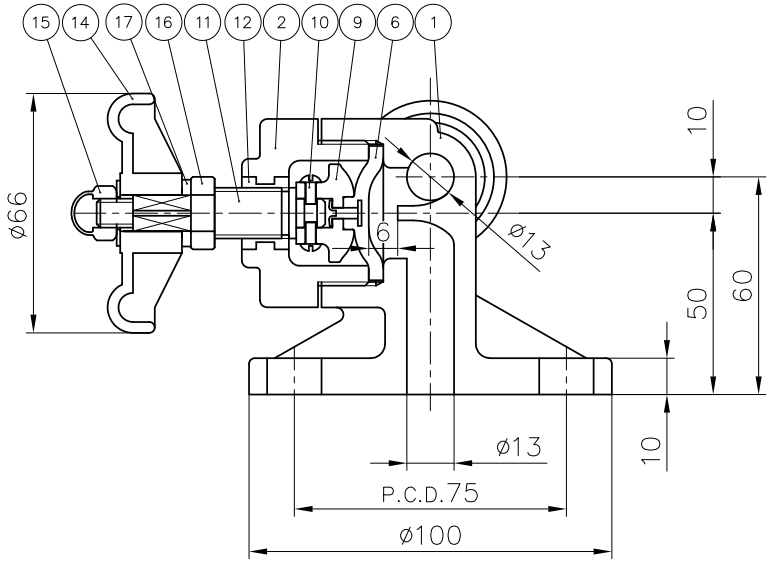

A−A

No.	DESCRIPTION	QTY.	MATERIAL	REMARKS
17	SPRING WASHER	1	STAINLESS (SUS304)	
16	STOPPER	1	COPPER ALLOY (C3604)	
15	NUT	1	STAINLESS (SUS304)	
14	HAND WHEEL	1	PP	
12	INDICATION OF MATERIAL	1	COPPER ALLOY (C3604)	
11	STEM	1	COPPER ALLOY (C3604)	
10	COMPRESSOR PIN	2	STAINLESS (SUS304)	
9	COMPRESSOR	1	PVDF	
8	O−RING (B)	1	□EPDM □FKM □PTFE[1)] □Others ( )	
7	O−RING (A)	2		
6	DIAPHRAGM	1		Material of (No.6) is FKM in case of used for (No.6a).
6a	PTFE DIAPHRAGM	1	PTFE	1) Used in case of PTFE choice.
5	DRAIN PLUG	1	□PVC □PP	
4	GLAND	1		
3	GLAND NUT	1		
2	BONNET	1		
1	BODY	1		

ITEM	GAUGE VALVE ASS'Y DIN : 20mm (3/4")		
DRAWN	S.Shimazaki	DATE	SCALE
		APR.24.2020	~
CHECKED	H.Kawano	DRAWING No.	
APPROVED	K.Koushou	GE−60001DE	4
SPECIAL ORDER No.		ASAHI YUKIZAI CORPORATION	