DIMENSIONS TABLE

Unit : mm

Nominal Size		d	DIN PN10 D	C	n	h	D_1	D_2	l_1 (LIFT)	L	t PVC C-PVC	t PP PVDF	H	H_1	H_2	S	S_1	S_2
65mm	2½"	67	185	145	4	18	175	220	34	290	22	22	266	188	61	85	11	20
80	3	78	200	160	8	18	201	220	42	310	24	24	280	202	63	100	15	28
100	4	100	220	180	8	18	241	257	50	350	24	26	329	241	78	120	15	28

NOTE.
1. Diaphragms except EPDM and PTFE are available in FKM, VIFLON®C (FKM-C), VIFLON®F (FKM-F), CPE, CSM, NBR and IIR when required.
2. The shape and appearance of assembly differ a little with nominal size compared to this drawing.

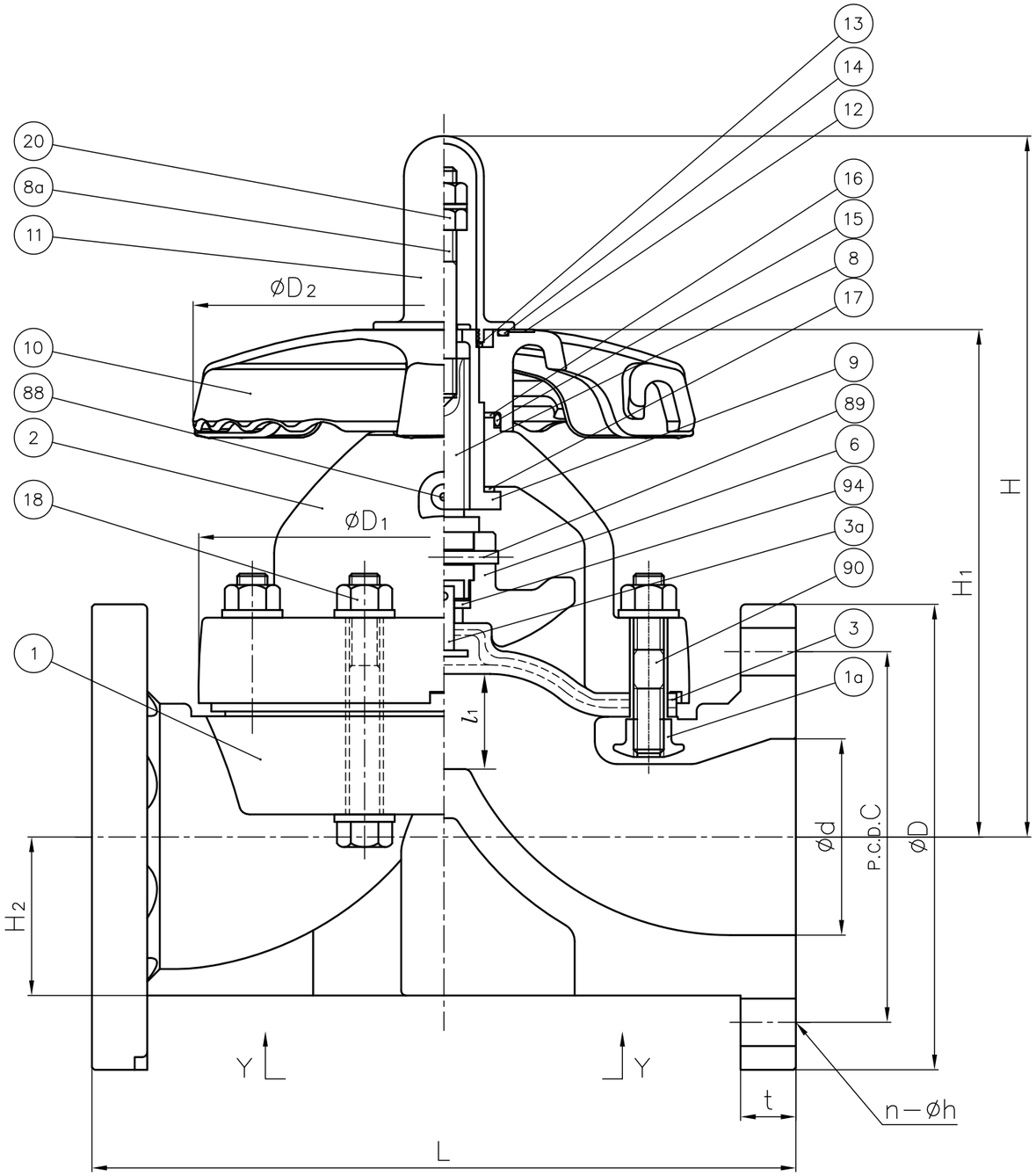

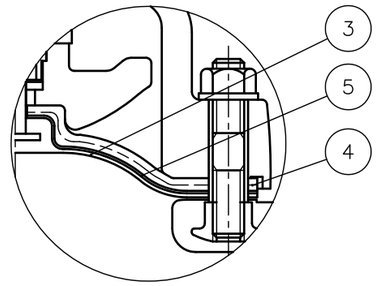

In case material of Diaphragm is PTFE with Cushion Cover

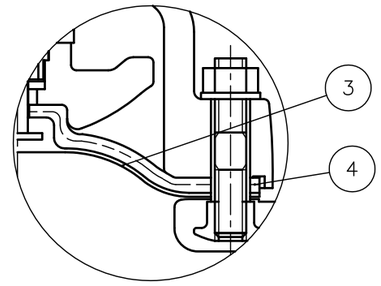

In case material of Diaphragm is PTFE

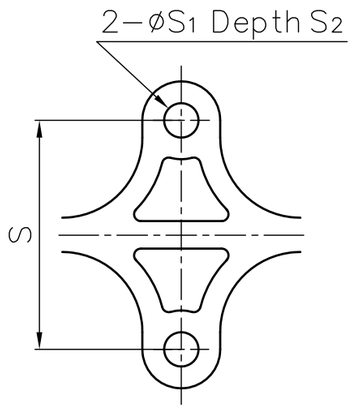

Y-Y

(Detail of Holes for Metallic Insert.)

No.	DESCRIPTION	QTY.	MATERIAL	REMARKS
1a	INSERTED NUT	4	COPPER ALLOY (C3604)	Used for PVC, C-PVC, PP Body
			STAINLESS STEEL (SUS304)	Used for PVDF Body
94	METAL OF COMPRESSOR	1	STAINLESS STEEL	SUS304
90	STUD BOLT・NUT	4sets	STAINLESS STEEL	SUS304
89	COMPRESSOR PIN	1	STAINLESS STEEL	SUS304
88	GREASE NIPPLE	1	COPPER ALLOY	C3604
20	STOPPER (A)	1	STAINLESS STEEL	SUS304
18	BOLT&NUT (A)	4sets	STAINLESS STEEL	SUS304
17	THRUST RING (B)	1	UHMWPE	
16	THRUST RING (A)	1	UHMWPE	
15	O-RING (B)	1	EPDM	
14	O-RING (A)	1	EPDM	
13	RETAINING RING - C TYPE	1	STAINLESS STEEL	SUS304
12	NAME PLATE	1	PVC	
11	GAUGE COVER	1	PC	
10	HAND WHEEL	1	PP	
9	SLEEVE	1	COPPER ALLOY	C3604
8a	INDICATOR ROD	1	STAINLESS STEEL	SUS304
8	STEM	1	COPPER ALLOY	C3604
6	COMPRESSOR	1	PVDF	
5	CUSHION COVER	1	□nothing (standard) □PVDF	Used for PTFE Diaphragm
4	CUSHION	1	EPDM	Used for PTFE Diaphragm
3a	INSERTED METAL OF DIAPHRAGM	1	STAINLESS STEEL	SUS304
3	DIAPHRAGM	1	□EPDM □PTFE □others ( )	
2	BONNET	1	BODY/BONNET □PVC/PVC □C-PVC/PP □PP/PP □PVDF/PPG □PVDF/PVDF	
1	BODY	1		

DIAPHRAGM VALVE (TYPE 14) ASS'Y
DIN PN10 : FLANGED END
65mm (2½") ~100mm (4")

DRAWN	M.Yamamoto	DATE	SCALE
		AUG.18.2010	~
CHECKED	H.Kawano	DRAWING No.	
APPROVED	Y.Ozaki	D1-M1002DE	5
SPECIAL ORDER No.		ASAHI YUKIZAI CORPORATION	

LX-A3-01